KOZYREV MIRROR

You will find all about Kozyrev Mirrors here!

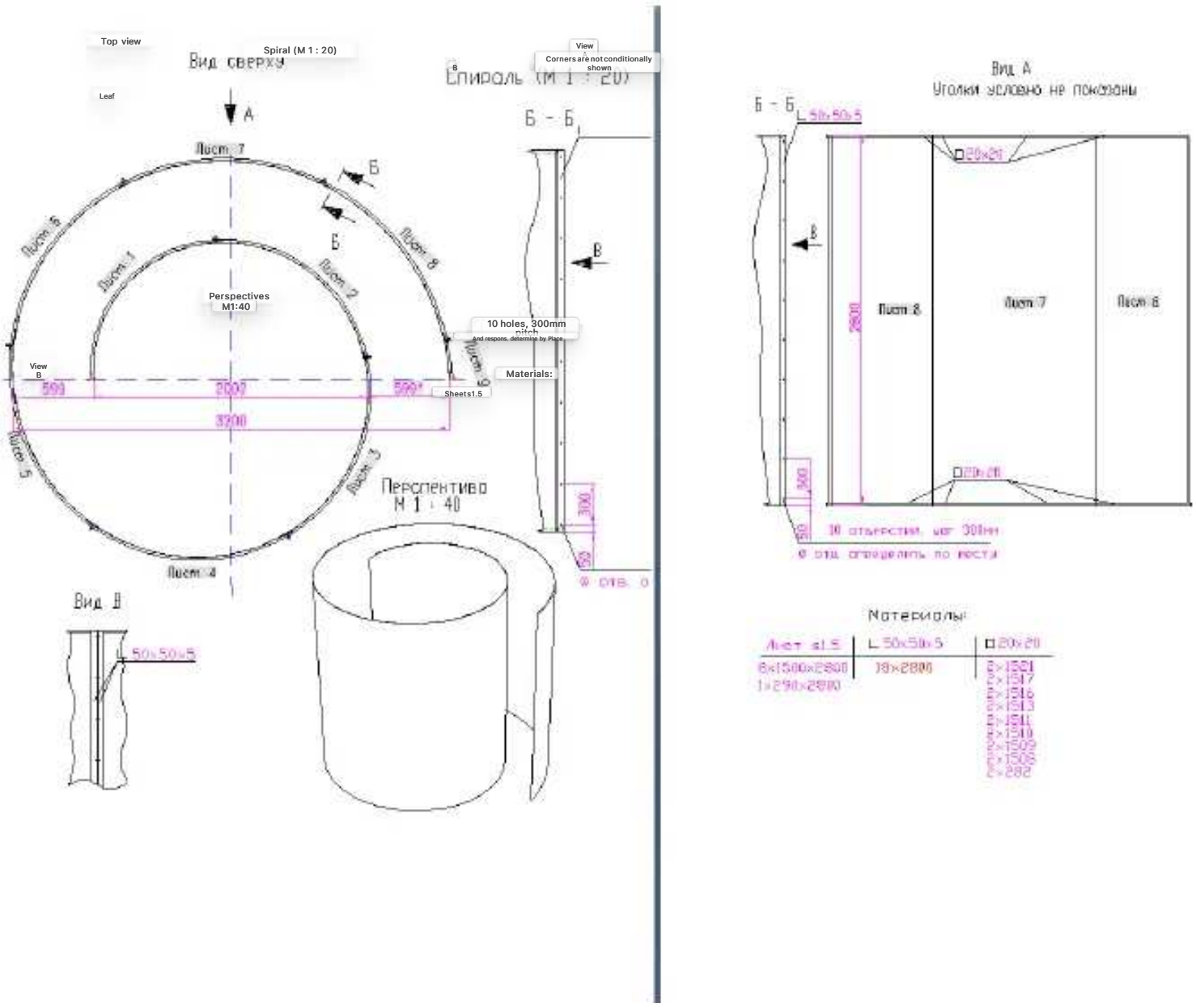

DRAWINGS OF KOZYREV'S MIRROR

Kozyrev's mirrors can be made by yourself, although it is quite difficult. To make Kozyrev Mirrors with your own hands, you will need drawings of Kozyrev Mirrors.

The Kozyrev Mirror device is a structure that limits the working space, made of metal plates made of aluminum alloy 1.5 mm thick, up to 280 cm high, 120 cm wide, with a polished surface and with curvature that provides focus at a distance of 50 cm from the working surface, connected to each other to form a spiral surface.

Sheet 2:

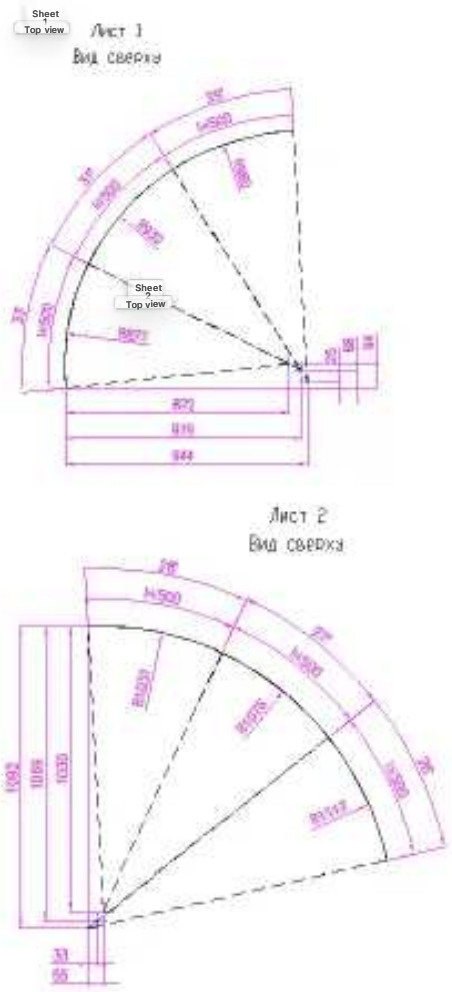

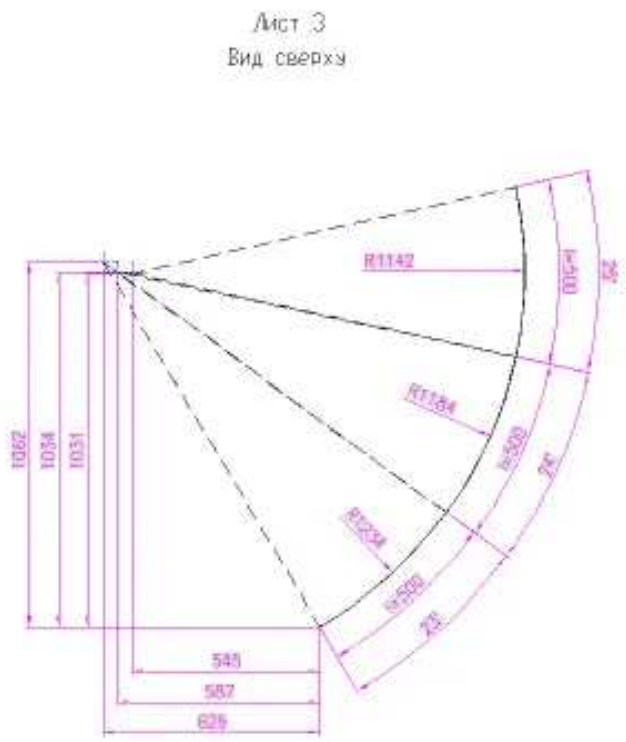

Sheet 3:

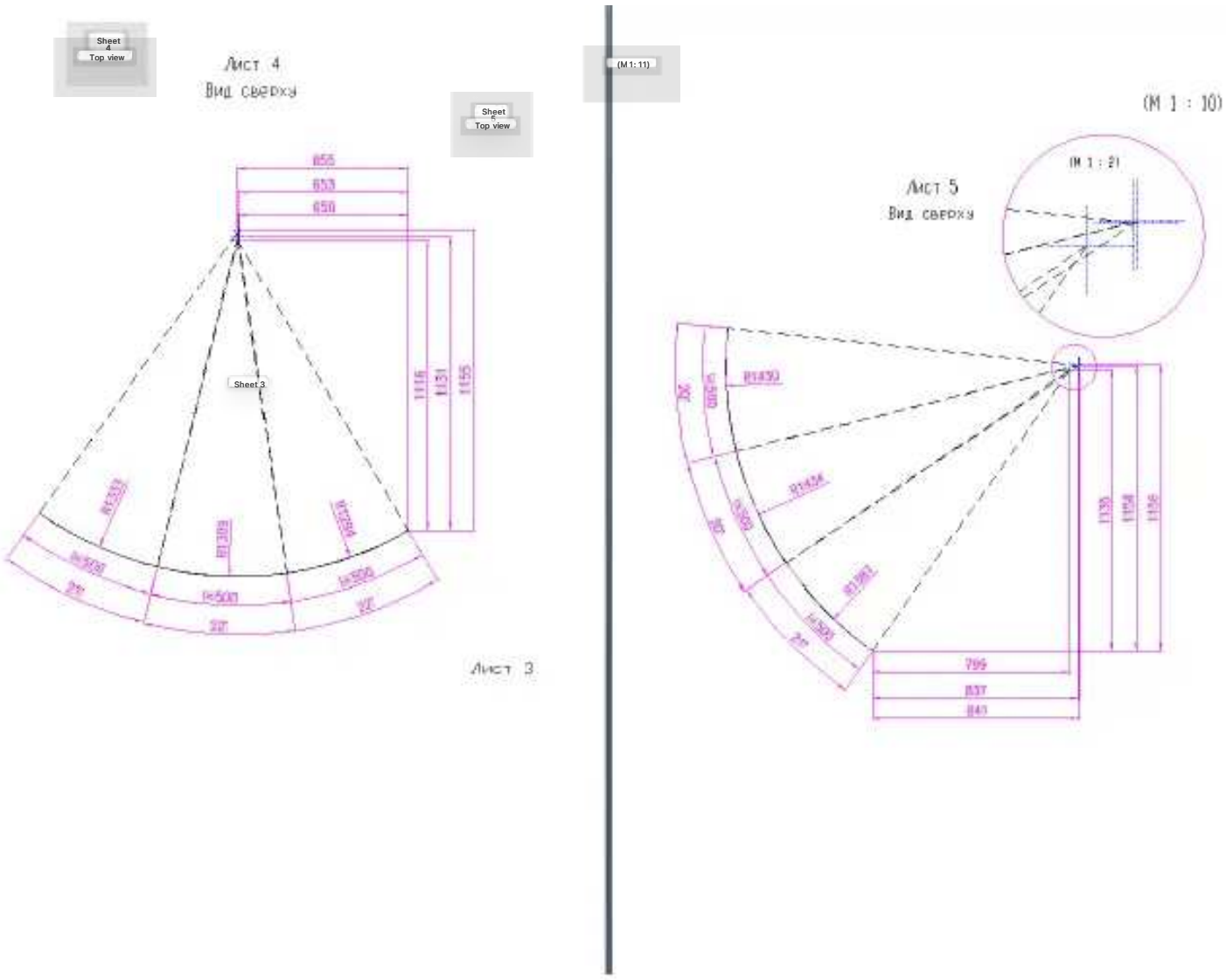

Sheet 4:

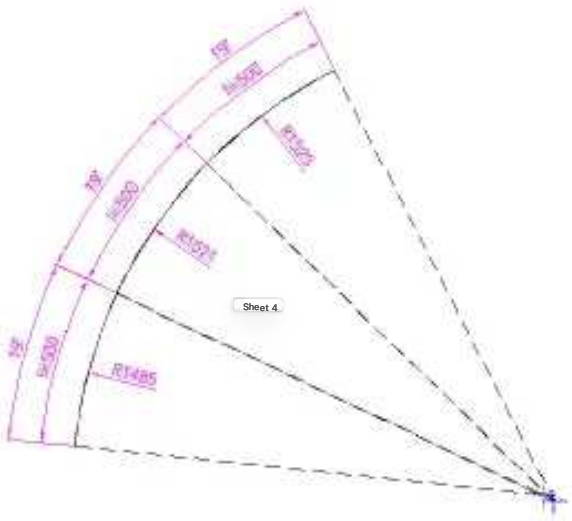
Лист 6
Вид сверху
R1485
Лист 4

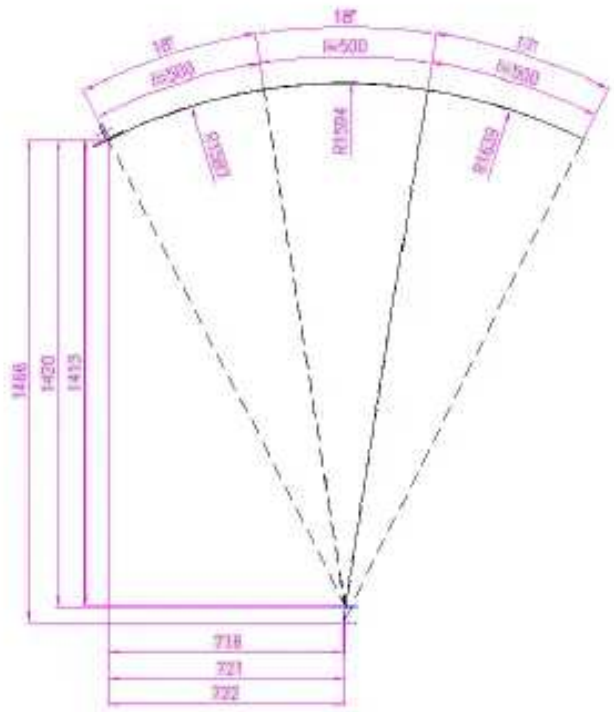
Лист 7
Вид сверху
1486
1420
1413
718
721
722

Sheet 5:

You can download drawings of Kozyrev Mirror from this link

These drawings of Kozyrev Mirror were found by us on the Internet and are given as an example of making the Kozyrev Mirror. To make Kozyrev Mirrors most accurately, use the Kozyrev Mirror Patent.